Rough In Kit Information for IWTS 6 CMS and IWTS 8 CMS Ceiling Speaker

Atlantic Technology®
INNOVATIVE HOME THEATER

Installation Instructions

Preparation

Rough-In Wall And Ceiling Bracket The bracket is designed to facilitate the installation of these speakers in new construction projects. The bracket not only gives you a solid metal mounting frame for extra support of the speaker, but also assures that the cut outs for the speakers are of the proper size and location. The bracket is designed so that the mounting arms will span studs or joists on either 16" or 24" centers. The flange may be oriented either in a horizontal or vertical fashion.

Ceiling Speaker Back Box The installer must be certain that there is sufficient room for the speaker back box and rough in bracket and that lead wires and electrical conduit can be brought to the planned location. 1/2" conduit electrical knock-outs are provided on all four sides of the back box for wiring convenience.

The following kits will be availble:

IC-NC-6 New Construction Kit for the 6 CMS. Includes two mounting rails and a steel plate for locating the speaker in the wallboard.

IC-NC-6 New Construction Kit for the 8 CMS. Includes two mounting rails and a steel plate for locating the speaker in the wallboard

IC-BOX-6/8 Back Box for either a 6 or 8 CMS speaker. The back box mounts to the rails included with the New Construction Kit. The appropriate kit must be ordered to install the back box.

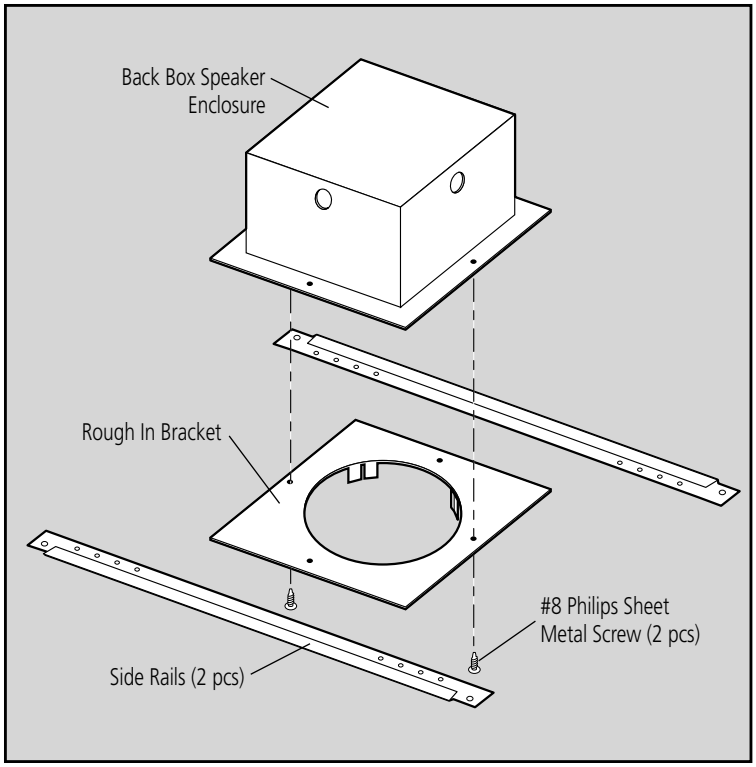

Assembly and Installation

Back BoxDimensions with Bracket:
15"W x 15-1/8"L x 6-1/2"D

If you are using a Ceiling Speaker Back Box, start with Step 1. Otherwise, skip to Step 3 for Rough In Bracket assembly and installation.

1. Attach the rough in bracket flange, tabs facing out, to the enclosure with the (2), #8 sheet metal screws provided.
2. Punch out one of the 4 knock-outs on the side of the enclosure to bring in the speaker wire and attach a 1/2" conduit nipple if necessary.
3. Slide one side of the flange of the bracket (or bracket/box assembly) into one of the mounting arms, making certain that it seats all the way under the rolled-over edge of the arm.
4. Slide the other arm onto the opposite side of the flange. Make certain the arms are located evenly on the flange.
5. Measure the mounting location of the bracket (or bracket/box) assembly against the stud work and attach it to the studs with nails or screws. Make sure the flange is facing outward.

   NOTE: *The bracket (or bracket/box) assembly may be slid from side to side on the arms after the bracket is mounted for final position adjustment. Do not mount the assembly closer than 1-1/2" to a stud or joists to allow the clamping feet to swing freely for clamping the speaker assembly in the wall or ceiling.*

6. Route the speaker wire through the knock-out hole in the back box and attach conduit if necessary to the installed nipple.
7. After the sheet rock or ceiling tiles are installed, the mounting hole for the ceiling speaker may be cut out and the speaker installed as normal with the clamping feet securing the assembly together.

343 Vanderbilt Avenue Norwood, MA 02062
(781) 762-6300 www.atlantictechnology.com