IC-BOX-6/8 Back Box

IC-NC-6e/8e New Construction Brackets

Installation Instructions

Back Box

NOTE: *When using both the Back Box and New Construction Ceiling Bracket, install the Back Box first.*

The back box provides a more favorable acoustic environment for the in-ceiling speakers and also affords a good measure of acoustic isolation between floors.

Nail or screw the flanges of the back box to the ceiling joists as shown in Fig 1. We recommend that you frame in between the ceiling joists as shown for additional support.

Figure 1

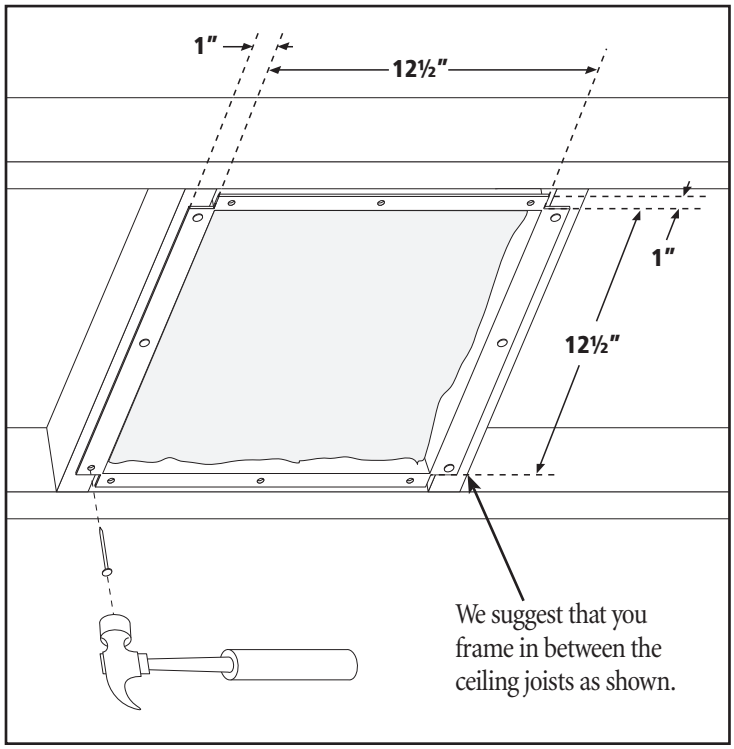

New Construction Ceiling Bracket

NOTE: *The New Construction Ceiling Bracket can be used either with or without the Back Box.*

The bracket is designed to facilitate the installation of the ICTS speakers in new construction projects. The bracket assures that the cutouts for the speakers are the proper size and location. The bracket is designed so that the snap-in mesh wings will span studs or joists on either 16" or 24" centers.

Locate the New Construction Bracket in front of the Back Box as shown. Use the IC-NC-6 series for Atlantic 6-inch speakers, and the IC-NC-8 series for Atlantic 8-inch speakers and the ICTS-6LCR, as that is built on an 8-inch frame.

The flange of the bracket should face down, into the room. Snap the wings into the receptacles on the round plastic frame. Nail or screw through the mesh wings into the joists as shown in Fig 2.

Route the speaker wire through any of the four knock-out holes in the back box.

When the sheet rock or ceiling tile is installed, the mounting hole for the ceiling speaker may be cut out and the speaker installed as normal with the speaker's clamping feet.

Figure 2

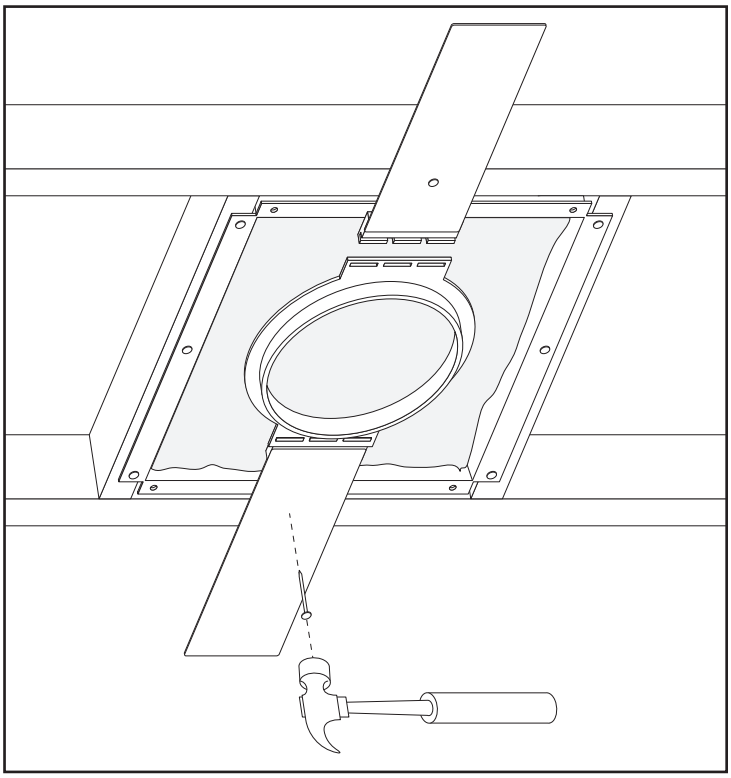

Atlantic Technology
343 Vanderbilt Avenue Norwood, MA 02062
(781) 762-6300 www.atlantictechnology.com